Technical Data Sheet

TAVISTOCK

CADENCE 600mm Wall Mounted Unit

Whats in the box: 1x CA600W.X + Fixings

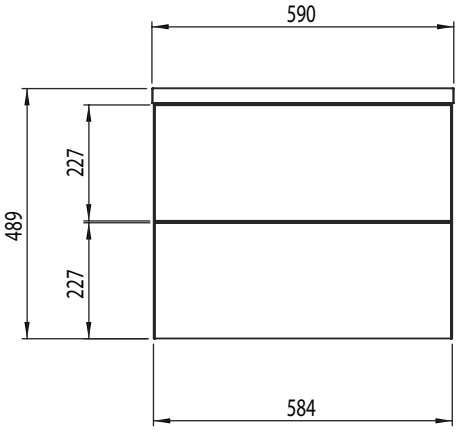

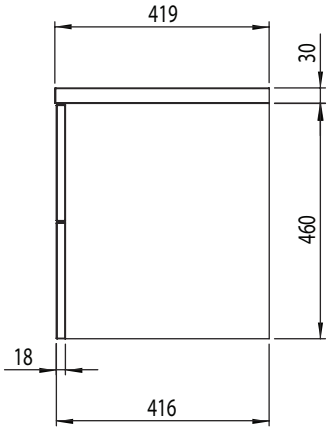

*Reference basin TDS for further info

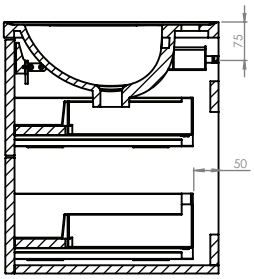

Diagrams not to scale
All dimensions in mm
tolerance of +/-5mm

Materials

Carcass: 18mm MFC or Painted MDF
Fascia Components: 18mm MFC or Painted MDF

**Dimensions are subject to change, customers are advised to measure actual product before commencing installation.
***Fixing point dimensions are for guidance only/the positions of wall fixing must be checked when product is received.

Extra Dimensions

Internal Drawer Depth - Front to Back:	327mm
Internal Drawer Height:	70mm
Internal Drawer Width:	506mm
Drawer Cut Out (W&D):	204mm x 243mm
Hanger Centres:	532mm

FAQs

Q: How big is the plumbing void at the back of the furniture?	A: 51mm
Q: Are the handles fitted?	A: No, handles need fitting.
Q: Are the runners soft close?	A: The runners are both soft close and quick release.
Q: How deep is the unit when the drawers are fully open?	A: Approx. 780mm including handle.
Q: Can the drawers be adjusted?	A: The drawers can be adjusted as detailed in the supplied instructions.
Q: What is the interior finish of the unit?	A: The unit interior finish is dark grey.
Q: Why wont the basin fit on the furniture?	A: Make sure the silicone strip has been fixed to the underside of the basin before installing if using a ceramic basin. *See image below*

NOTE: Colours unique to Tavistock - No RAL Code available