# Technical Data Sheet

## Henley Shower Systems

ROPER RHODES®

| No. | Description | Code | Fixings Included |
|---|---|---|---|
| 1 | Henley Single Function Concealed Shower System | SVSET53 | YES |

**FLOW RATE DATA IS TESTED UNDER LABORATORY CONDITIONS: ACTUAL FLOW RATE MAY VARY DEPENDING ON DOMESTIC SUPPLY AND ACCESSORIES**

| Inlet Pressure | Flow Rate (l/min) |
|---|---|
| 0.3bar | 6.90 |
| 0.4bar | 7.97 |
| 0.5bar | 8.91 |
| 1bar | 12.60 |
| 2bar | 17.82 |
| 3bar | 18.80 |

## Dimensions - SVSET53

Diagrams not to scale. All dimensions in mm (tolerance of +/-5mm)

*Dimensions are subject to change, customers are advised to measure actual product before commencing installation.

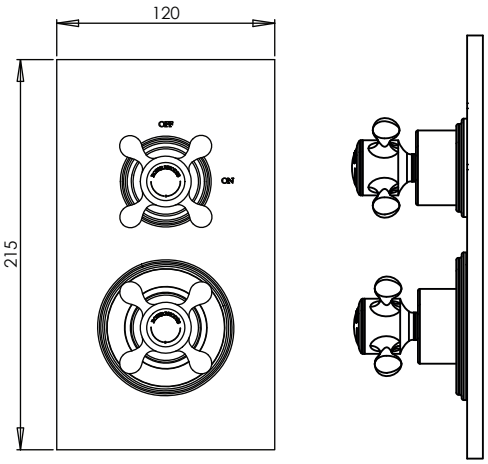


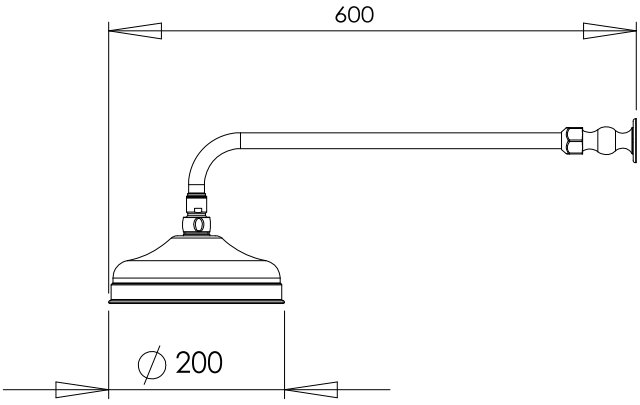


## FAQs

**What is the valve outlet dimension?** 1/2" BSP

**What is the valve inlet dimension?** 3/4" BSP

**Height of shower handwet (in holder)?** Adjustable

**What is the recommended minimum pressure?** 0.3bar

**What material are the handles made from?** Chrome-Plated Brass

**Can the shower arm length be adjusted?** Yes, the shower arm can be cut down prior to fitting.

## Components

Dual Function Thermostatic Shower Valve - SV3114:
- Brass thermostatic push button shower valve - RR14
- Chrome plated zinc cover plate - SVCOMP1

Adjustable Brass Fixed Arm - SVARM01

230mm Shower Head - SVHEAD35
Brass Riser Rail - SVRAIL07
Three Function Shower Handset - SVHEAD38
Easy Clean PVC Shower Hose -SVHOSE02
Brass Wall Elbow - SVACS03

# Technical Data Sheet

Henley Shower Systems

ROPER RHODES®

| No. | Description | Code | Fixings Included |
|---|---|---|---|
| 1 | Henley Dual Function Concealed Diverter Shower System | SVSET52 | YES |

**FLOW RATE DATA IS TESTED UNDER LABORATORY CONDITIONS: ACTUAL FLOW RATE MAY VARY DEPENDING ON DOMESTIC SUPPLY AND ACCESSORIES**

| Inlet Pressure | Flow Rate (l/min) |
|---|---|
| 0.5bar | 8.84 |
| 1bar | 12.50 |
| 2bar | 17.68 |
| 3bar | 18.40 |
| 4bar | 25.00 |
| 5bar | 27.70 |

## Dimensions - SVSET52

Diagrams not to scale. All dimensions in mm (tolerance of +/-5mm)
*Dimensions are subject to change, customers are advised to measure actual product before commencing installation.

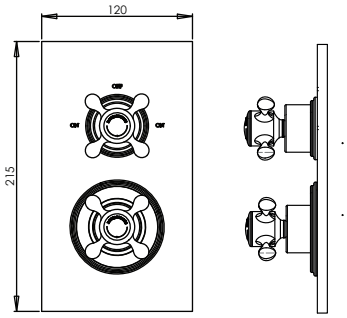


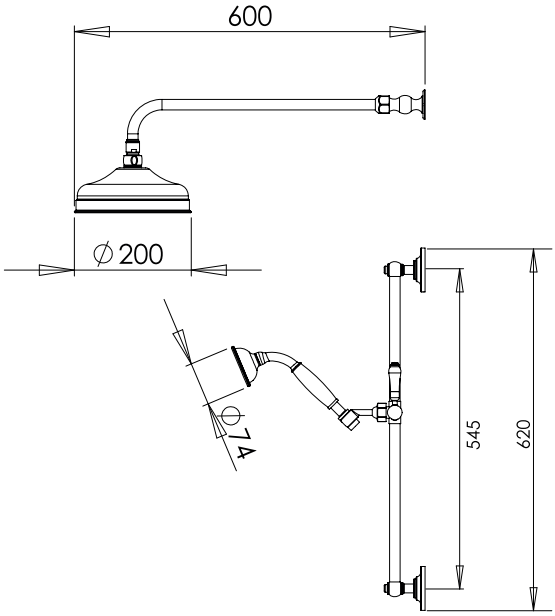


## FAQs

**What is the valve inlet dimension?** 1/2" BSP - 15mm pipework
**What is the valve outlet dimension?** 1/2" BSP threaded outlet
**Can the shower arm and riser rail length be adjusted?** Yes, the shower arm and riser rail can be cut down prior to fitting.
**What ios the hose length?** 1.5m
**What is the height of the handset (in holder)?** Adjustable
**What is the recommended minimum pressure?** 0.5Bar
**What material is the handset made from?** Chrome-plated Brass

## Components

Chrome Plated Concealed Dual Function Valve Body - TRADSVCON2:
Brass Head; Brass Arm; Brass Wall Elbow; Brass Wall Elbow;
Brass Handset; Stainless Steel Slider; Concealed Brass Dual Function Valve

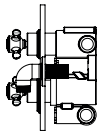

Chrome Plated Brass Concealed Valve Flow Handle - TRADSVCONH

Chrome Plated Brass Concealed Valve Temperature Handle - TRADSVCONHT

# Technical Data Sheet

## Henley Shower Systems

ROPER RHODES®

| No. | Description | Code | Fixings Included |
|---|---|---|---|
| 1 | Henley Triple Function Concealed Diverter Shower System | SVSET146 | YES |

**FLOW RATE DATA IS TESTED UNDER LABORATORY CONDITIONS: ACTUAL FLOW RATE MAY VARY DEPENDING ON DOMESTIC SUPPLY AND ACCESSORIES**

| Inlet Pressure | Flow Rate (l/min) |
|---|---|
| 0.5bar | 8.84 |
| 1bar | 12.12 |
| 2bar | 17.68 |
| 3bar | 18.40 |
| 4bar | 25.00 |
| 5bar | 27.70 |

## Dimensions - SVSET146

Diagrams not to scale. All dimensions in mm (tolerance of +/-5mm)

*Dimensions are subject to change, customers are advised to measure actual product before commencing installation.

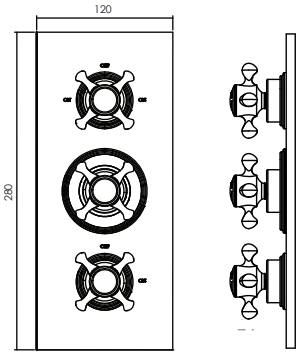


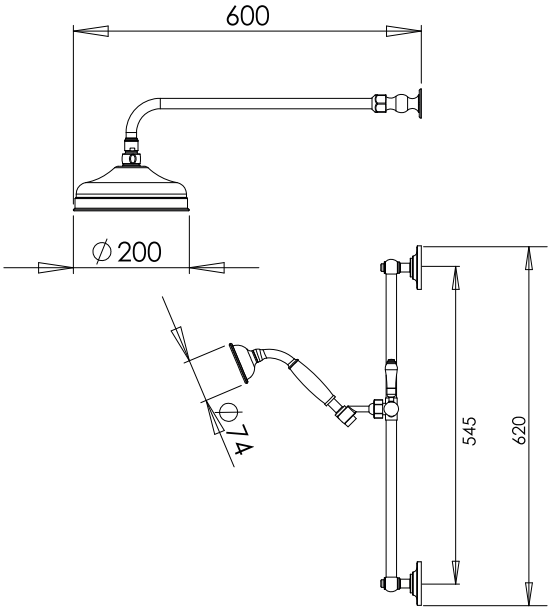


## FAQs

**What is the valve inlet dimension?** 1/2" BSP - 15mm pipework
**What is the valve outlet dimension?** 1/2" BSP threaded outlet
**Can the shower arm and riser rail length be adjusted?** Yes, the shower arm and riser rail can be cut down prior to fitting.
**What ios the hose length?** 1.5m
**What is the height of the handset (in holder)?** Adjustable
**What is the recommended minimum pressure?** 0.5Bar
**What material is the handset made from?** Chrome-plated Brass

## Components

Chrome Plated Concealed Triple Function Valve Body - TRADSVCON3:
Brass Head; Brass Arm; Brass Wall Elbow; Brass Wall Elbow;
Brass Handset; Stainless Steel Slider; Concealed Brass Triple Function Valve

Chrome Plated Brass Concealed Valve Flow Handle - TRADSVCONH
Chrome Plated Brass Concealed Valve Temperature Handle - TRADSVCONHT

# Technical Data Sheet

## Henley Shower System

ROPER RHODES®

| No. | Description | Code | Fixings Included |
|---|---|---|---|
| 1 | Henley Single Function Exposed Shower System | SVSET51 | YES |

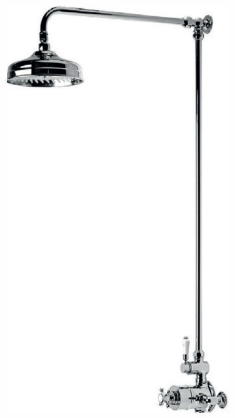

**FLOW RATE DATA IS TESTED UNDER LABORATORY CONDITIONS: ACTUAL FLOW RATE MAY VARY DEPENDING ON DOMESTIC SUPPLY AND ACCESSORIES**

| Inlet Pressure | Flow Rate (l/min) |
|---|---|
| 0.3bar | 6.74 |
| 0.4bar | 7.78 |
| 0.5bar | 8.70 |
| 1bar | 12.30 |
| 2bar | 17.39 |
| 3bar | 18.20 |

## Dimensions - SVSET51

Diagrams not to scale. All dimensions in mm (tolerance of +/-5mm)

*Dimensions are subject to change, customers are advised to measure actual product before commencing installation.

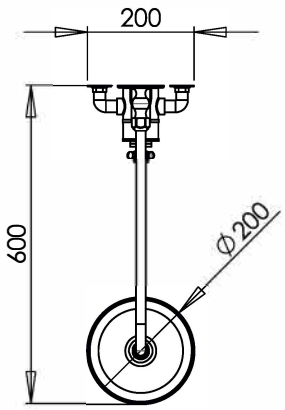


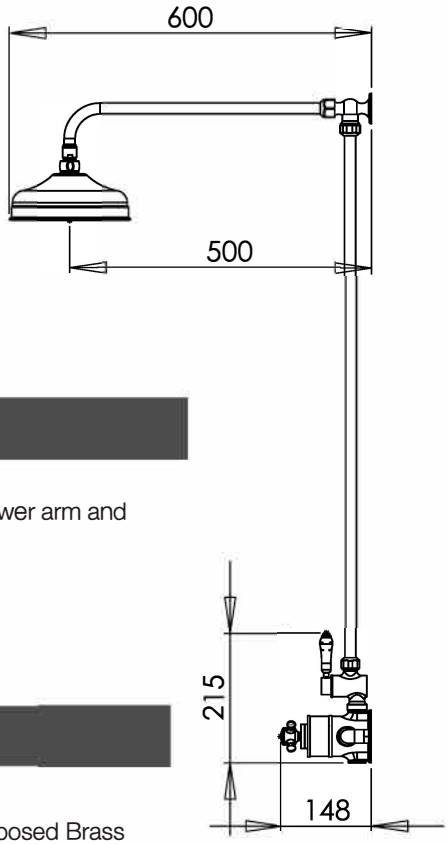


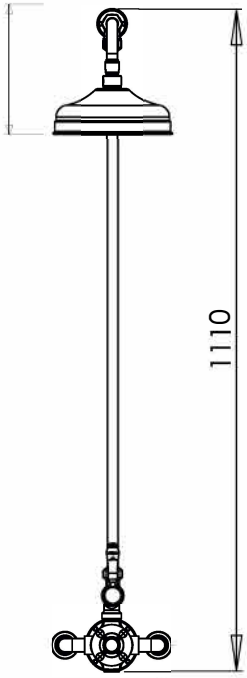


## FAQs

**What is the valve inlet dimension?** 1/2" BSP - 15mm pipework

**Can the shower arm and riser rail length be adjusted?** Yes, the shower arm and riser rail can be cut down prior to fitting.

**What is the hose length?** 1.5m

**What is the diameter of the riser rail?** 18mm

**What is the recommended minimum pressure?** 0.3Bar

**What material is the handset made from?** Chrome-plated Brass

## Components

Chrome Plated Exposed Single Function Valve Body - TRADSVEXP1:
Brass Head; Brass Arm; Brass Wall Elbow; Stainless Steel Riser Rail; Exposed Brass Single Function Valve, Stainless Steel Slider

Chrome Plated Brass Concealed Valve Flow Handle - TRADSVEXPH

# Technical Data Sheet

## Henley Shower Systems

ROPER RHODES®

| No. | Description | Code | Fixings Included |
|---|---|---|---|
| 1 | Henley Dual Function Exposed Shower System | SVSET50 | YES |

**FLOW RATE DATA IS TESTED UNDER LABORATORY CONDITIONS: ACTUAL FLOW RATE MAY VARY DEPENDING ON DOMESTIC SUPPLY AND ACCESSORIES**

| Inlet Pressure | Flow Rate (l/min) |
|---|---|
| 0.5bar | 8.63 |
| 1bar | 12.20 |
| 2bar | 17.25 |
| 3bar | 17.80 |
| 4bar | 24.40 |
| 5bar | 27.04 |

## Dimensions - SVSET50

Diagrams not to scale. All dimensions in mm (tolerance of +/-5mm)

*Dimensions are subject to change, customers are advised to measure actual product before commencing installation.

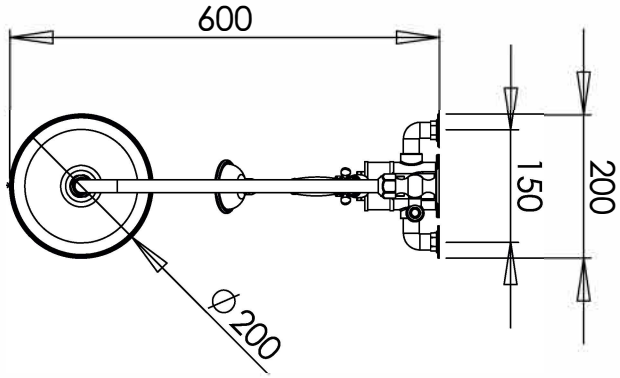


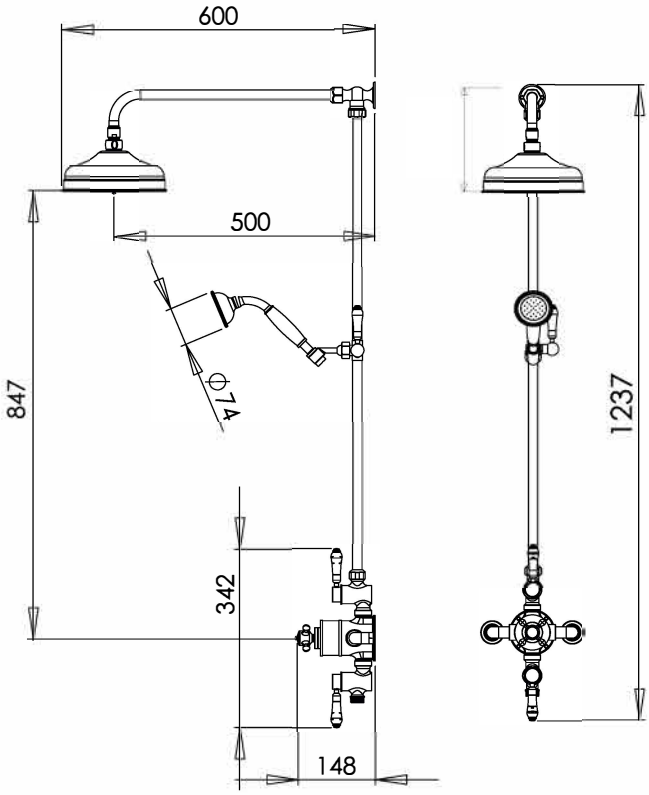


## FAQs

**What is the valve inlet dimension?** 1/2" BSP - 15mm pipework
**Can the shower arm and riser rail length be adjusted?** Yes, the shower arm and riser rail can be cut down prior to fitting.
**What ios the hose length?** 1.5m
**What is the height of the handset (in holder)?** Adjustable
**What is the recommended minimum pressure?** 0.5Bar
**What material is the handset made from?** Chrome-plated Brass

## Component

Chrome Plated Exposed Triple Function Valve Body - TRADSVEXP2:
Brass Head; Brass Arm; Brass Wall Elbow; Stainless Steel
Riser Rail; Brass Handset; Stainless Steel Slider; Exposed Brass 2F Valve

Chrome Plated Brass Concealed Valve Flow Handle - TRADSVEXPH