TECHNICAL DATA SHEET

Faber Close Slim Toilet Seat

ROPER RHODES®

NO.	Description	Product Code	Fixings included	Gross Weight
1	Soft Close Slim Toilet Seat	DC14078	YES	2.7KG

DIMENSIONS

DIAGRAMS NOT TO SCALE | ALL DIMENSIONS IN MM TOLERANCE OF ± 5MM
ALL PRODUCTS CONFORM TO BRITISH STANDARDS

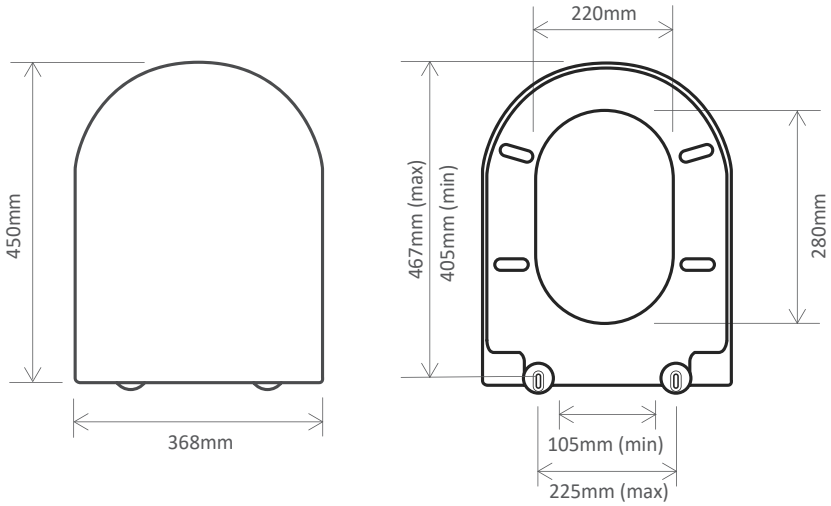

*Dimensions are subject to change, customers are advised to measure actual product before commencing installation.

FAQs

Q - What's the maximum test load of the seat?
A - 150kg

Q - What are the fixings made from?
A - Stainless Steel Cover Plates/Screws, Nylon Anchor Plates, Rubber Washers, Nylon Fixing Plugs.

Q - What finish are the hinge covers supplied with the seat?
A - Chrome

Q - Can the seat hinges be upgraded to a different finish?
A - Yes using DC4011 (black), DC4012 (brushed brass) or DC4028 (gunmetal), DC4045 (brushed bronze)

Q - What colour finish is the seat?
A - Alpine White

Key Dimensions Descriptions	Key Dimensions (mm)
Seat/Lid Front to Back	450mm
Seat/Lid Left to Right	368mm
Ring Hole Front to Back	280mm
Ring Hole Left to Right	220mm
Seat Overall Thickness	44mm
Width of Back of Seat	368mm

Customer Services: Roper Rhodes Ltd | Brassmill Lane Trading Estate | Bath | BA1 3JF
Tel: 01225 303 900 | Fax: 01225 448 877 | Email: sales@roperrhodes.co.uk | Web: www.roperrhodes.co.uk