TECHNICAL DATA SHEET

Universal 1Tap Hole 550 Basin and Semi Pedestal

NO.	Description	Product Code	Fixings included	Gross Weight
1	Basin	DC14083	NO	14.2 KG
2	Semi Pedestal	DSMP	YES	9 KG

DIMENSIONS

DIAGRAMS NOT TO SCALE | ALL DIMENSIONS IN MM TOLERANCE OF ± 5MM
ALL PRODUCTS CONFORM TO BRITISH STANDARDS

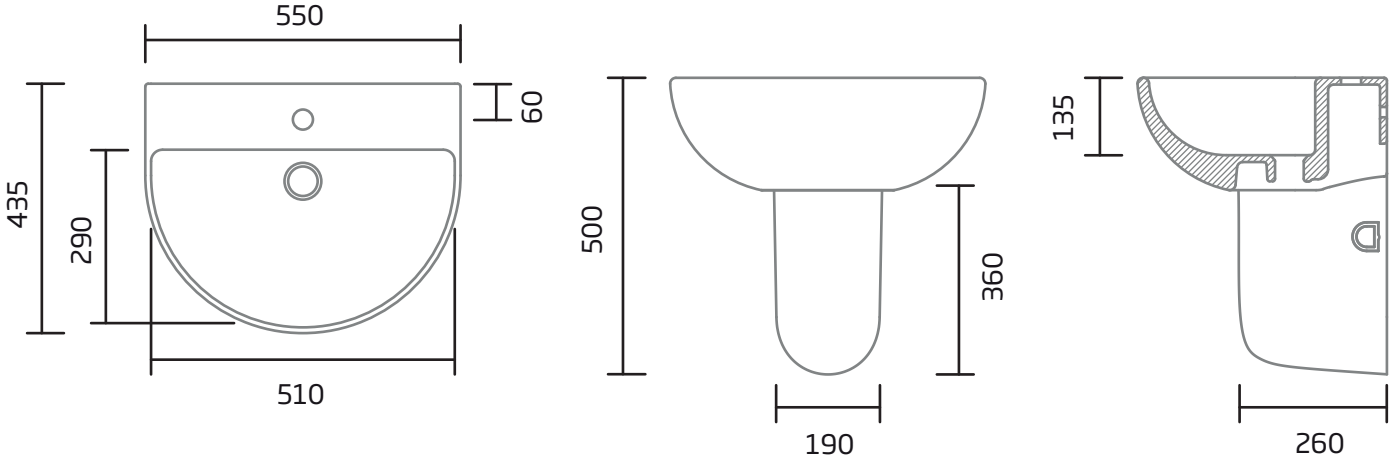

*Dimensions are subject to change, customers are advised to measure actual product before commencing installation.
**Fixing point dimensions are for guidance only. The positions of fixings must be checked when product is received.

FAQs

Q - What is the maximum water depth of the basin?
A - 92mm up to the overflow.

Q - Can this basin be wall hung?
A - Yes..

Q - Can this basin be mounted using a pedestal?
A - Yes, use code DPED

Q - How thick is the basin edge/rim?
A - 8mm

Q - Does the basin have an integral overflow?
A - Yes

Q - What finish is the ceramic glaze?
A - Alpine White

Key Dimensions Descriptions	Key Dimensions (mm)
Internal Bowl Depth	135mm
Internal Bowl Front to Back	290mm
Internal Bowl Left to Right	510mm
Tap Ledge	130mm
Taphole Centre to Waste Centre	110mm
Taphole Centre to Back of Basin	57mm
Waste Centre to Back of Basin	167mm
Width of Rear Basin	550mm
Basin Depth	185mm