TECHNICAL DATA SHEET

Square Flush Button, Black - TR9028

NO.	Description	Product Code	Fixings included	Gross Weight
1	Square Flush Button - Black	TR9028	YES	0.2KG

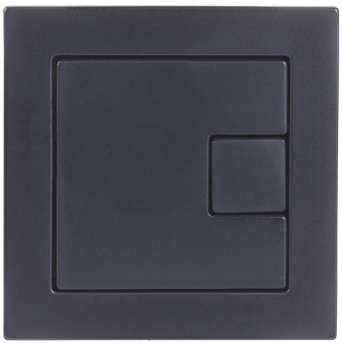

DIMENSIONS

DIAGRAMS NOT TO SCALE | ALL DIMENSIONS IN MM TOLERANCE OF ± 5MM
ALL PRODUCTS CONFORM TO BRITISH STANDARDS

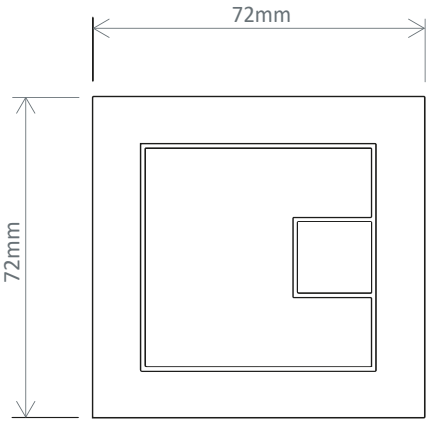

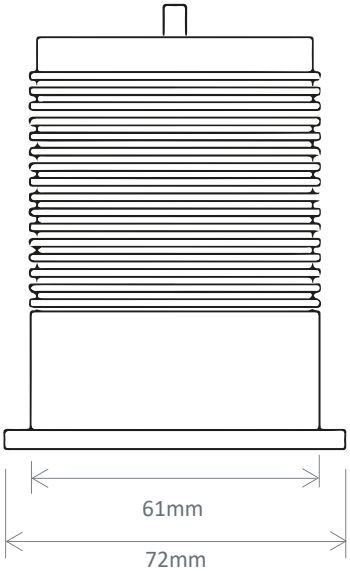

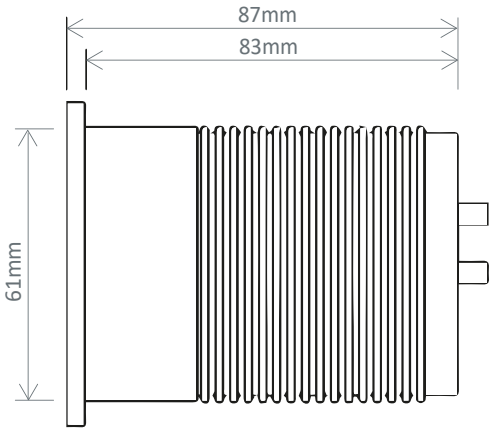

*Dimensions are subject to change, customers are advised to measure actual product before commencing installation.

FAQs

Q - What material is this product made of?
A - ABS.

Q - Which concealed cisterns and Wall Hung WC Frames is this product compatible with?
A - This flush button is compatible with all dual flush pneumatic flushing cisterns.
- Compatible with following Roper Rhodes Group Products:

In-Wall Cistern - TR9009
Vortex Cistern Bottom Inlet - VOR790
Apex Cistern Side Inlet - TR9002
Comfort Height Cistern - TR9008

1.17m Wall Hung WC Frame - TR9006
1.0m Wall Hung WC Frame - TR9015
0.82m Wall Hung WC Frame - TR9005